2.7 Transmission casing with shift–control and parking lock

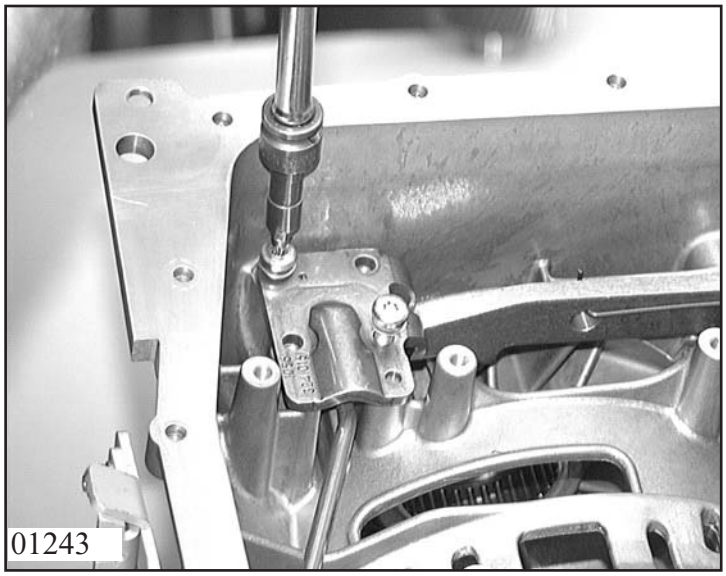

Loosen locknut and pull off lever.
Loosen the 4 machine screws and take out the guide plate.

(Wrench size = Torx - TX 27)

(for E Version)

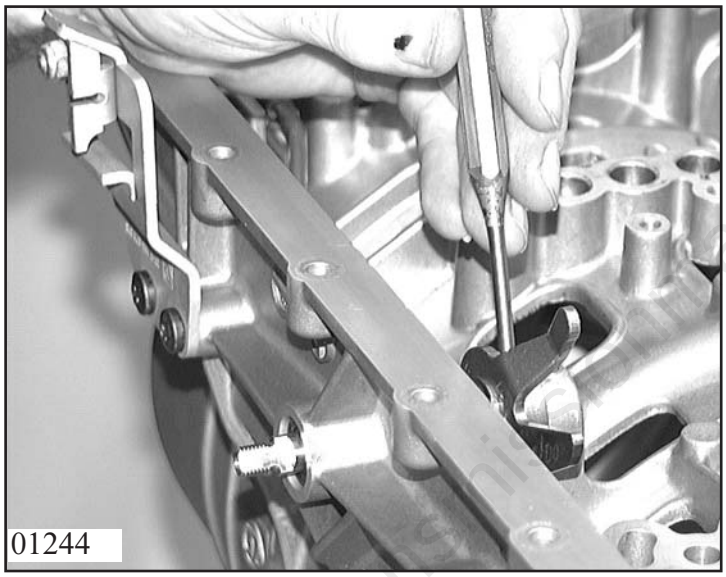

Drive clamping sleeve out of parking disk with a suitable mandrel and pull out selector shaft.
Remove sleeve and spring.

Next, take out parking disk with connecting rod. Lever out the shaft sealing ring with a screwdriver.
Loosen the 2 Torx screws for the emergency release angle and take it off.

(for M Version)

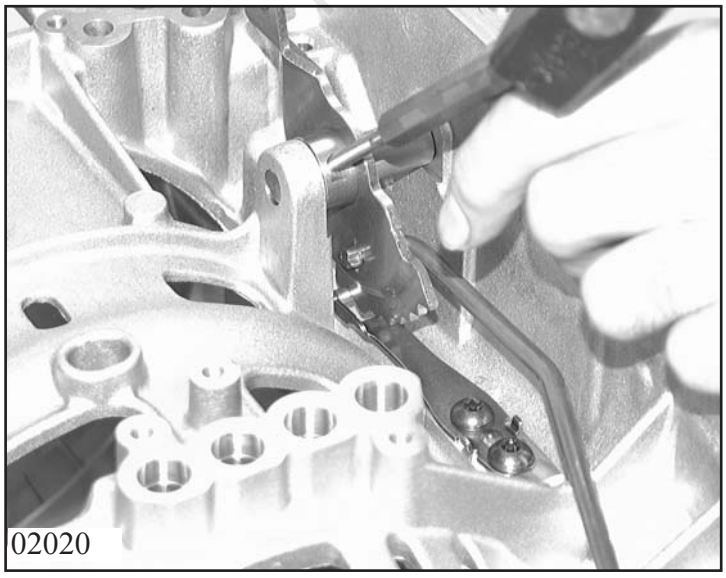

Drive clamping sleeve out of detent disk with a suitable mandrel and pull out selector shaft.

Next take out the detent disk with connecting rod. Lever out the shaft seal ring with a screwdriver.
The detent spring normally remains in the transmission casing.
To remove it, loosen the two Torx screws.

(Wrench size = Torx - TX 27 H)

Remove screw plug with sealing ring.

(Wrench size = 6 mm Hexagonal socket)

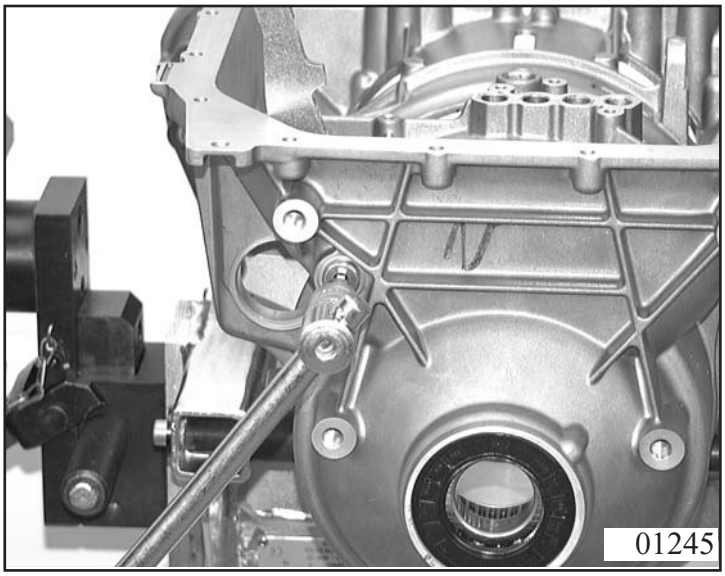

Press pin out of transmission casing. The ratchet with spring can then be taken off.

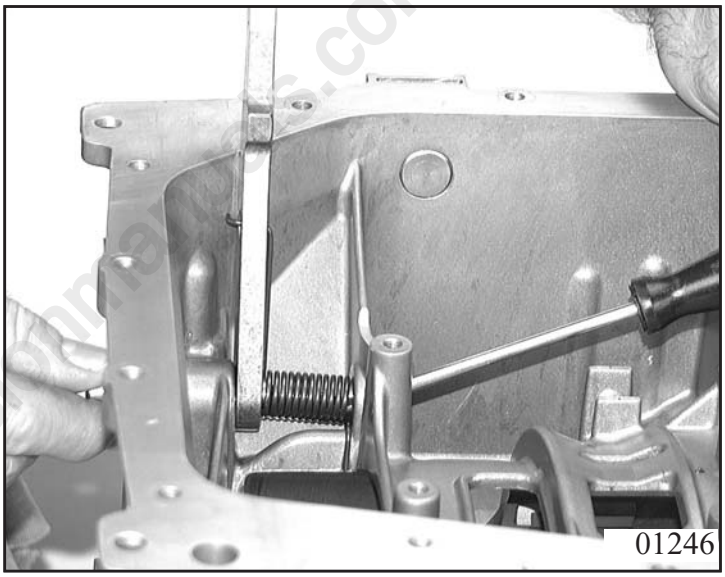

Transmissionmanuals.com

Remove the shaft sealing ring from the transmission casing with a suitable lever. Remove the snap ring with pliers.

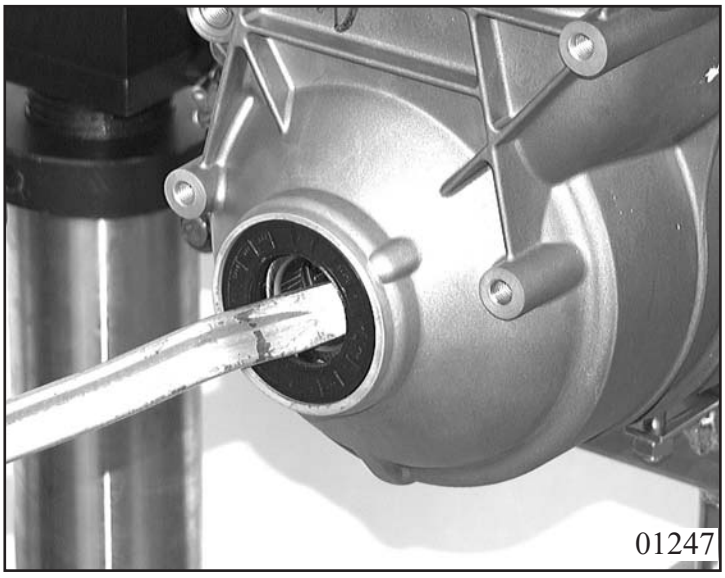

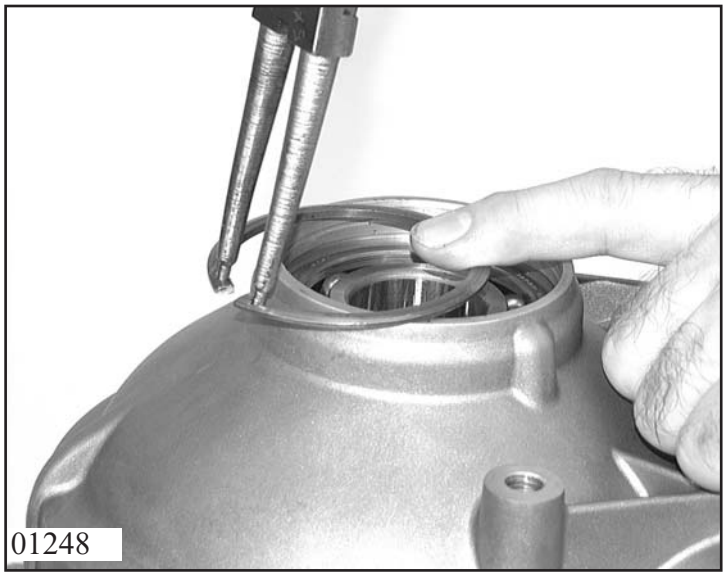

Remove the snap ring with pliers.
Press the ball bearing out of the transmission casing with a suitable mandrel.

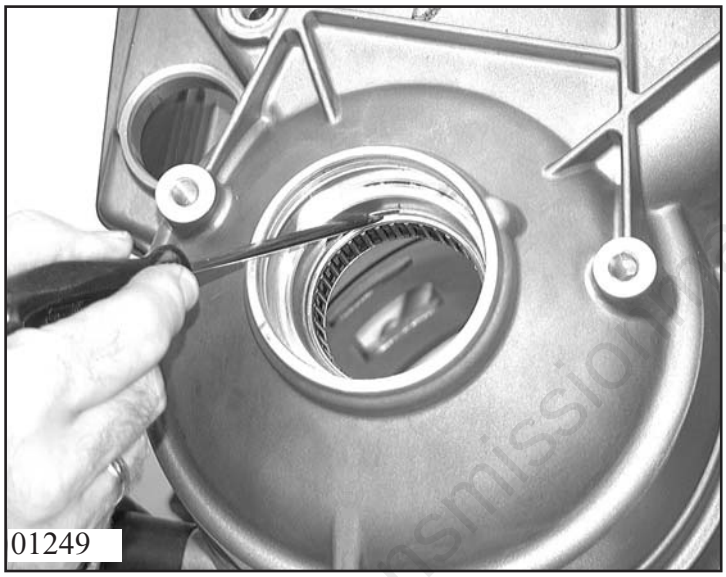

Remove the snap ring with pliers.
If necessary, heat the casing around the needle roller bearing with a fan heater to 70° C. Turn housing with output side down and remove the needle roller bearing from the transmission casing.

Transmissionparts.com

To clean the transmission casing, remove all the screw plugs and caps.

1 screw plug for WK (lock-up clutch) open.
(Wrench size = 5 mm Hexagonal socket)

Pull 2 plastic drain plugs out of the oil cooler inlet and outlet.

Pull off 1 breather cover.

Transmissionmanuals.com

3. Assembly
3.1 Transmission casing with shift control and parking lock

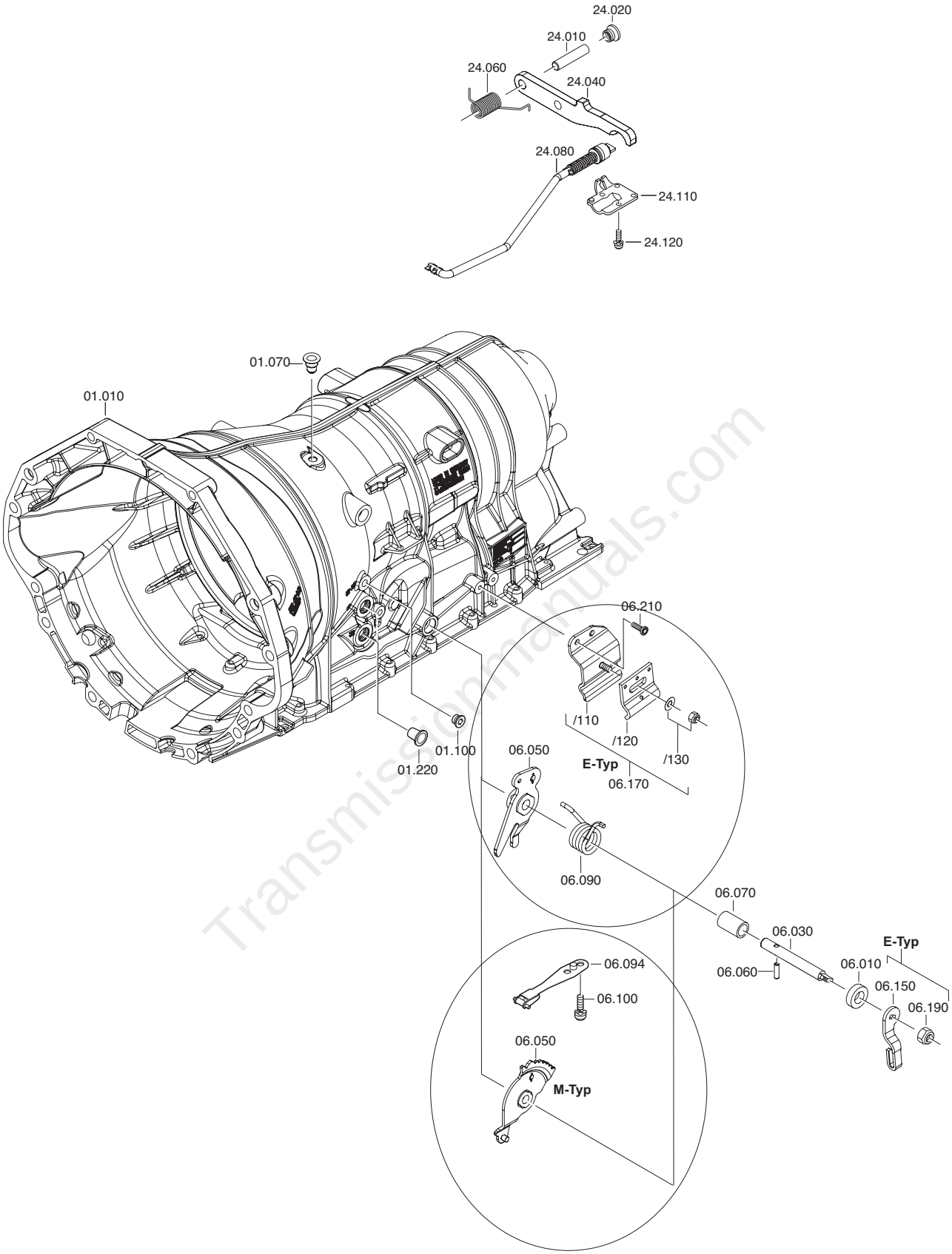

Transmissionmanuals.com

Drive breather 01.070 into transmission casing 01.010 with a plastic-faced hammer.

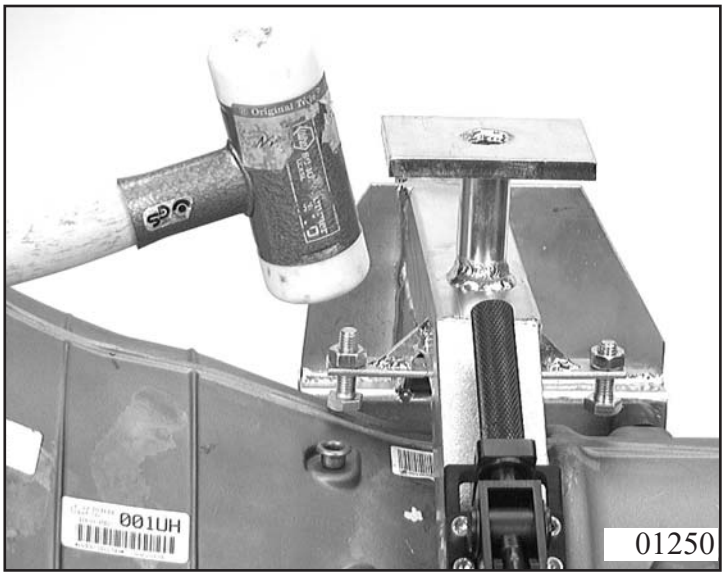

01250

Warning!
This is only necessary with a new transmission casing.

Install shaft sealing ring 06.010 in transmission casing with pressing-in mandrel 5x46 002 561.

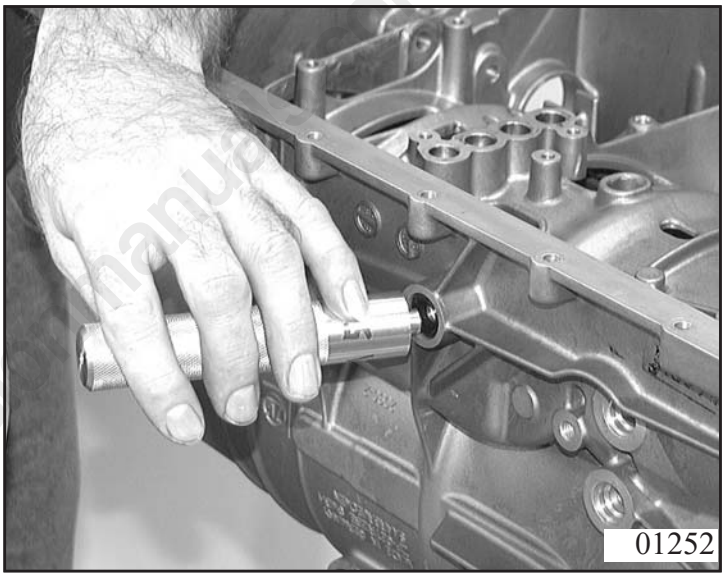
01252

Insert new screw plug 01.100.
Press in 2 transport plugs 01.220 by hand.

(for tightening torque see Chapter 1.5)

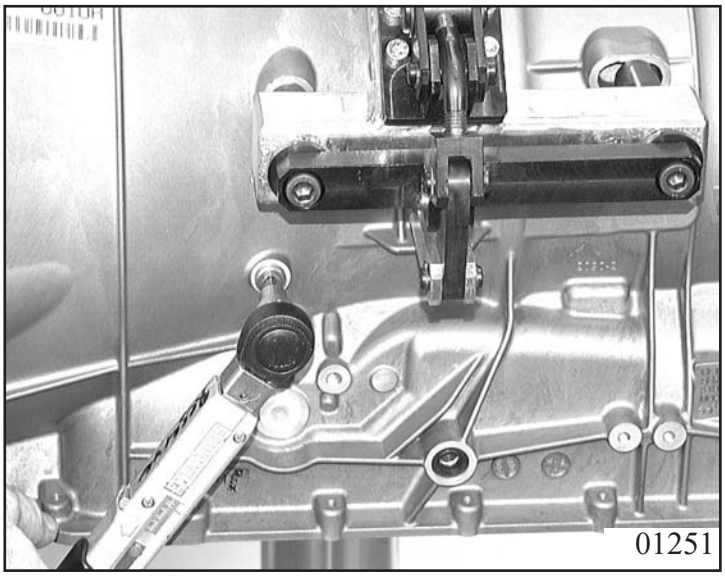
01251